2. Specifications

2.1 Specification Sheet

Parameter		Unit	Value	
Model			GEH12AA-K6DNA1A	GEH09AA-K6DNA1F
Product Code			CV010002900	CV010002700
Power Supply	Rated Voltage	V ～	220-240	220-240
	Rated Frequency	Hz	50	50
	Phases		1	1
Power Supply Mode			Outdoor	Outdoor
Cooling Capacity(Min~Max)		W	3520(800~4400)	2700(700~3400)
Heating Capacity(Min~Max)		W	3800(1100~4400)	2900(600~3500)
Cooling Power Input(Min~Max)		W	1000(160~1500)	720(170~1300)
Heating Power Input(Min~Max)		W	960(165~1500)	730(130~1350)
Cooling Current Input		A	4.48	3.5
Heating Current Input		A	4.30	3.6
Rated Input		W	1500	1350
Rated Current		A	6.72	6.0
Air Flow Volume(SH/H/HM/M/LM/L/SL)		m^3/h	600/520/480/440/400/360/280	500/430/410/370/330/280/250
Dehumidifying Volume		L/h	1.2	0.8
EER		W/W	3.52	3.75
COP		W/W	3.96	3.97
SEER		W/W	7.0	7.2
SCOP(Average/Warmer/Colder)		W/W	4.1/5.3/-	4.0/5.3/-
Application Area		m^2	16-24	12-18
Indoor Unit	Indoor Unit Model		GEH12AA-K6DNA1A/I	GEH09AA-K6DNA1F/I
	Indoor Unit Product Code		CV010N02900	CV010N02700
	Fan Type		Centrifugal	Centrifugal
	Fan Diameter Length(DXL)	mm	Φ370X80	Φ370X80
	Cooling Speed (SH/H/HM/M/LM/L/SL)	r/min	750/650/600/550/500/450/350	650/560/530/480/430 /370/320
	Heating Speed (SH/H/HM/M/LM/L/SL)	r/min	750/650/600/550/500/450/350	650/560/530/480/430/370/320
	Fan Motor Power Output	W	30	30
	Fan Motor RLA	A	0.15	0.15
	Fan Motor Capacitor	μF	/	/
	Evaporator Form		Aluminum Fin-copper Tube	Aluminum Fin-copper Tube
	Evaporator Pipe Diameter	mm	Φ7	Φ7
	Evaporator Row-fin Gap	mm	2-1.3	2-1.3
	Evaporator Coil Length (LXDXW)	mm	511X400X25.4	511X400X25.4
	Swing Motor Model		MP24EB/MP24AE	MP24EB/MP24AE
	Swing Motor Power Output	W	1.5/1.5	1.5/1.5
	Fuse Current	A	3.15	3.15
	Sound Pressure Level (SS/H/MH/M/ML/L/SL)	dB (A)	Cooling:44/40/38/36/33/29/25 Heating:44/40/38/36/33/29/25	Cooling:39/36/33/31/29/26/23 Heating:38/36/32/30/28/25/22
	Sound Power Level (SS/H/MH/M/ML/L/SL)	dB (A)	Cooling:54/50/48/46/43/39/35 Heating:54/50/48/46/43/39/35	Cooling:50/48/45/44/42/38/34 Heating:50/48/45/44/42/38/34
	Dimension (WXHXD)	mm	700X215X600	700X215X600
	Dimension of Carton Box (LXWXH)	mm	785X280X682	785X280X682
	Dimension of Package(LXWXH)	mm	788X295X685	788X295X685
	Net Weight	kg	15.5	15.5
	Gross Weight	kg	18.5	18.5

Outdoor Unit	Outdoor Unit Model		GEH12AA-K6DNA1A/O	GEH09AA-K6DNA1F/O
	Outdoor Unit Product Code		CV010W02900	CV010W02700
	Compressor Manufacturer		ZHUHAI LANDA COMPRESSOR CO.,LTD	ZHUHAI LANDA COMPRESSOR CO., LTD
	Compressor Model		QXF-A102zE190B	QXF-A079zE190A
	Compressor Oil		FW68DA	FW68DA
	Compressor Type		Rotary	Rotary
	Compressor LRA.	A	/	/
	Compressor RLA	A	4.60	4.6
	Compressor Power Input	W	1023	790
	Compressor Overload Protector		HPC115/95U1/KSD115ºC	HPC115/95U1/KSD115ºC
	Throttling Method		Electron expansion valve	Electron expansion valve
	Set Temperature Range	ºC	16~30	16~30
	Cooling Operation Ambient Temperature Range	ºC	-15~43	-15~43
	Heating Operation Ambient Temperature Range	ºC	-22~24	-22~24
	Condenser Form		Aluminum Fin-copper Tube	Aluminum Fin-copper Tube
	Condenser Pipe Diameter	mm	Φ7.94	Φ7
	Condenser Rows-fin Gap	mm	1-1.4	1-1.4
	Condenser Coil Length (LXDXW)	mm	731X19.05X550	710X19.05X508
	Fan Motor Speed	rpm	900	900
	Fan Motor Power Output	W	30	30
	Fan Motor RLA	A	0.36	0.36
	Fan Motor Capacitor	μF	/	/
	Outdoor Unit Air Flow Volume	m^3/h	2200	1600
	Fan Type		Axial-flow	Axial-flow
	Fan Diameter	mm	Φ438	Φ400
	Defrosting Method		Automatic Defrosting	Automatic Defrosting
	Climate Type		T1	T1
	Isolation		I	I
	Moisture Protection		IPX4	IPX4
	Permissible Excessive Operating Pressure for the Discharge Side	MPa	4.3	4.3
	Permissible Excessive Operating Pressure for the Suction Side	MPa	2.5	2.5
	Sound Pressure Level (H/M/L)	dB (A)	52/-/-	49/-/-
	Sound Power Level (H/M/L)	dB (A)	62/-/-	60/-/-
	Dimension(WXHXD)	mm	848X596X320	782X540X320
	Dimension of Carton Box (LXWXH)	mm	878X360X630	820X355X580
	Dimension of Package(LXWXH)	mm	881X363X645	823X358X595
	Net Weight	kg	30.5	27.5
	Gross Weight	kg	33.5	30
	Refrigerant		R32	R32
	Refrigerant Charge	kg	0.75	0.55
Connection Pipe	Connection Pipe Length	m	5	5
	Connection Pipe Gas Additional Charge	g/m	16	16
	Outer Diameter Liquid Pipe	mm	Φ6	Φ6
	Outer Diameter Gas Pipe	mm	Φ9.52	Φ9.52
	Max Distance Height	m	10	10
	Max Distance Length	m	20	20
	Note: The connection pipe applies metric diameter.			

The above data is subject to change without notice. Please refer to the nameplate of the unit.

2.2 Operation Characteristic Curve

Cooling

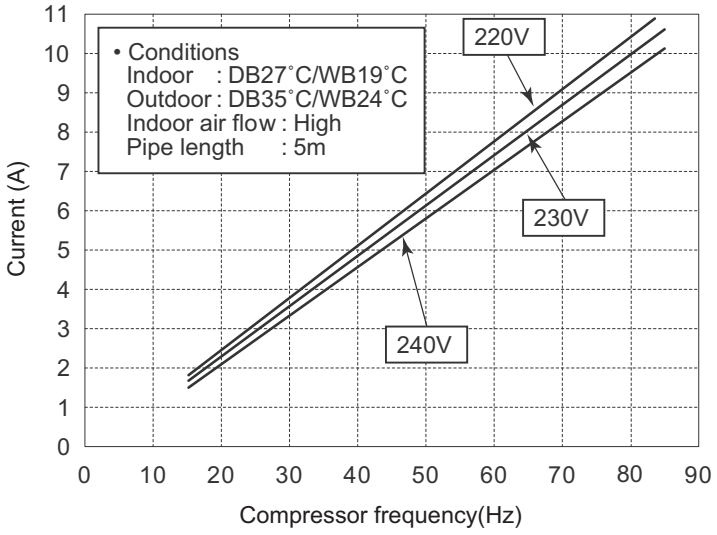

Heating

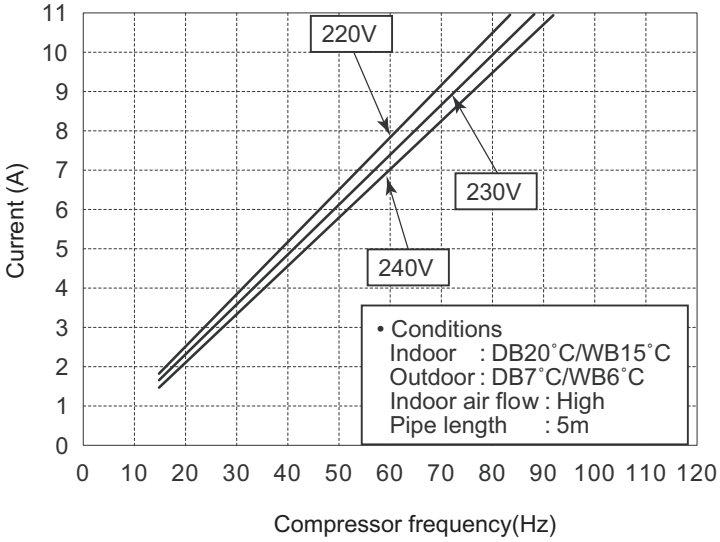

2.3 Capacity Variation Ratio According to Temperature

Cooling

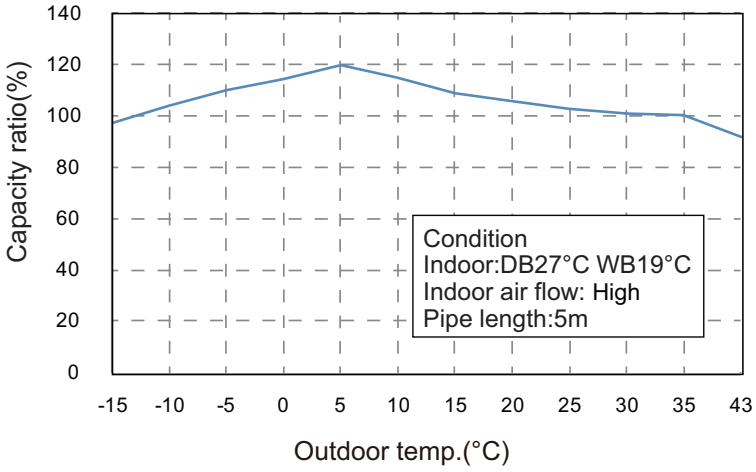

Heating

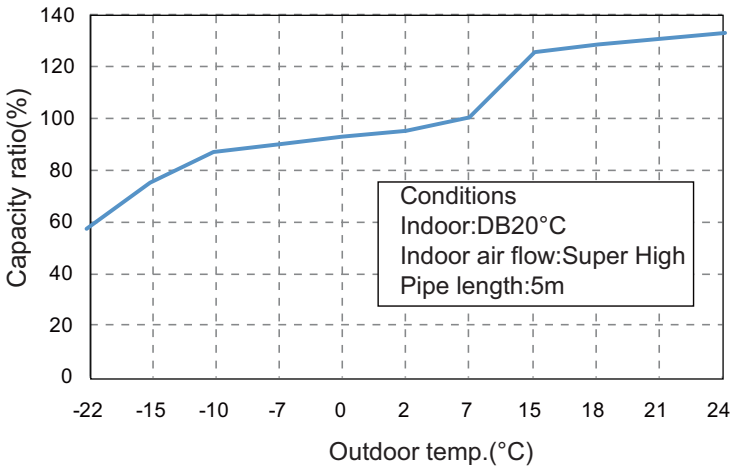

3. Outline Dimension Diagram

3.1 Indoor Unit

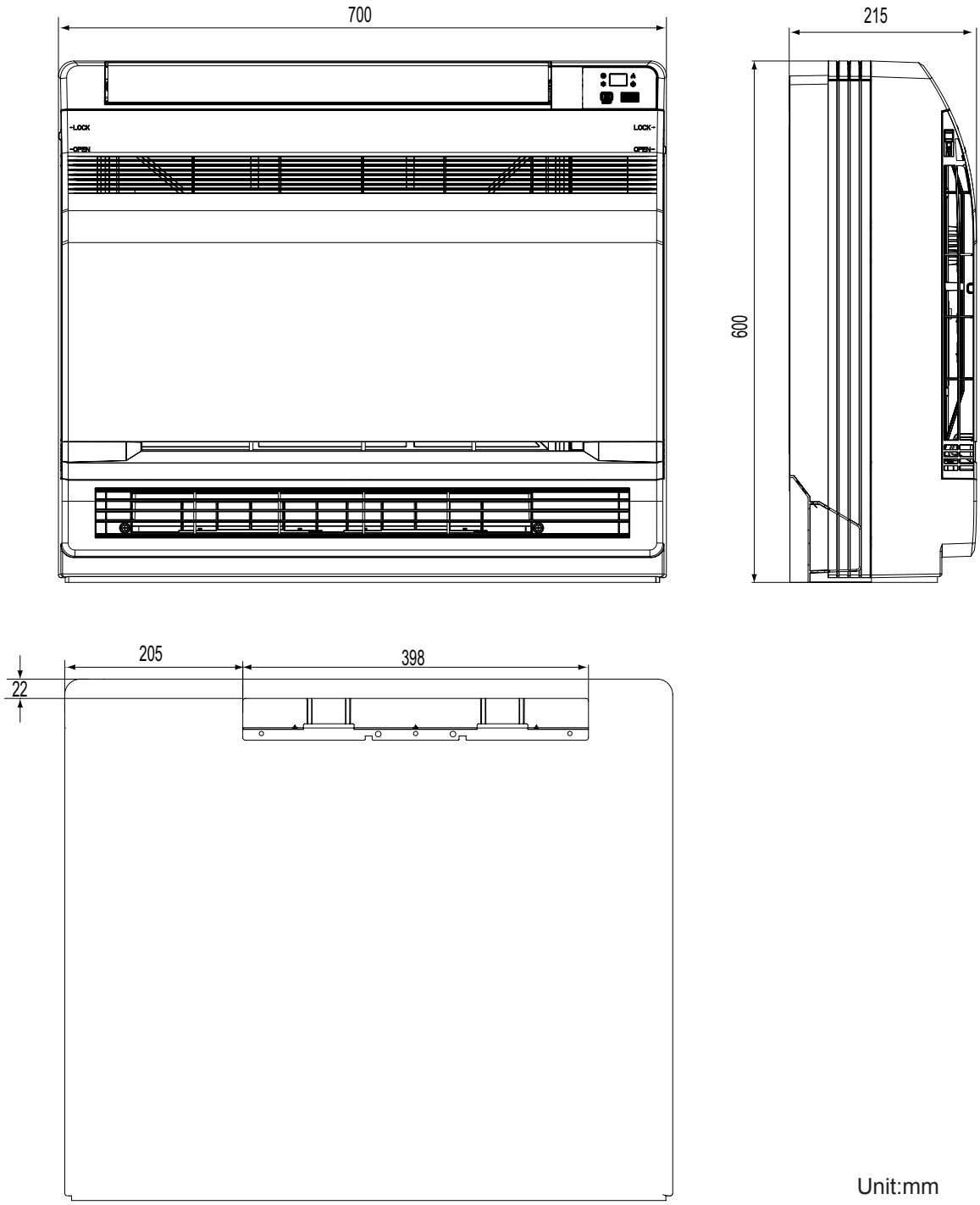

Unit:mm

3.2 Outdoor Unit

GEH12AA-K6DNA1A/O

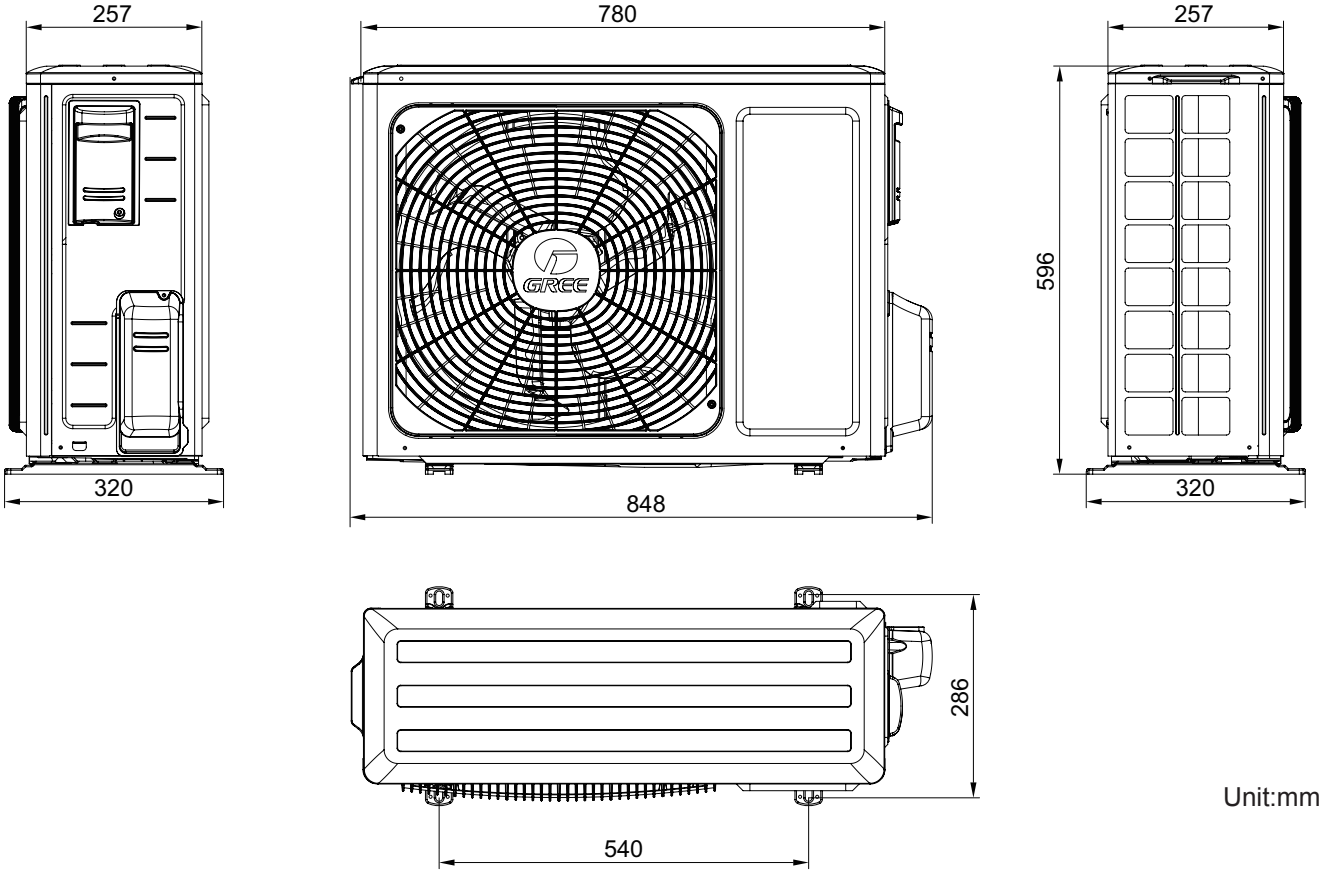

Unit:mm

GEH09AA-K6DNA1F/O

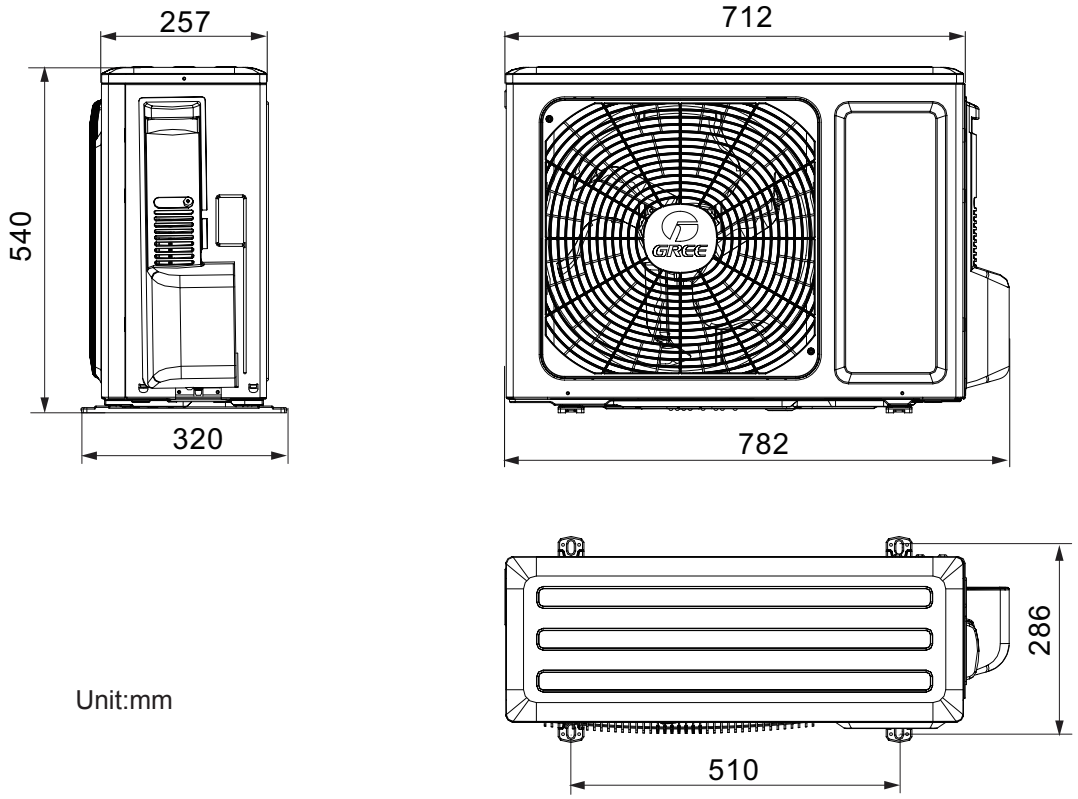

Unit:mm

Unit:mm